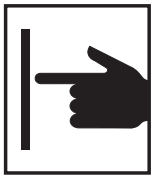

Roca

LOFT

5A9743

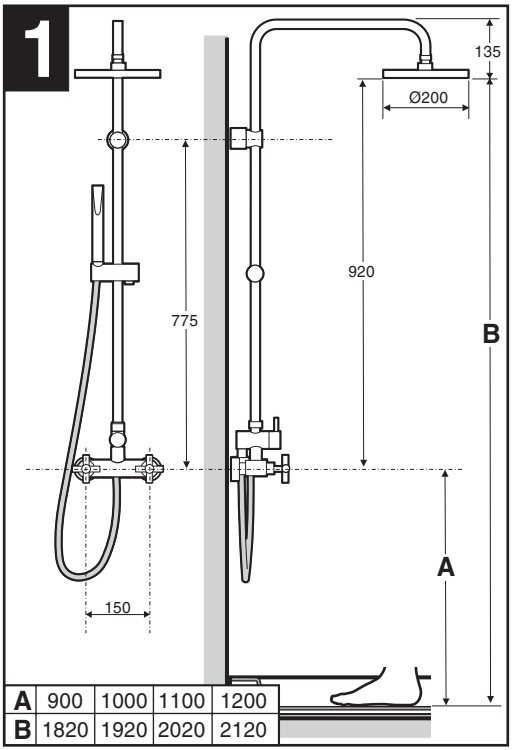

A	900	1000	1100	1200
B	1820	1920	2020	2120

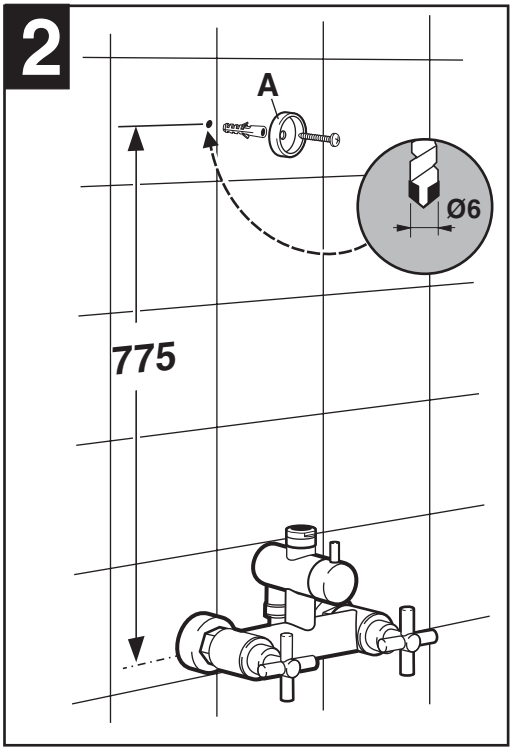

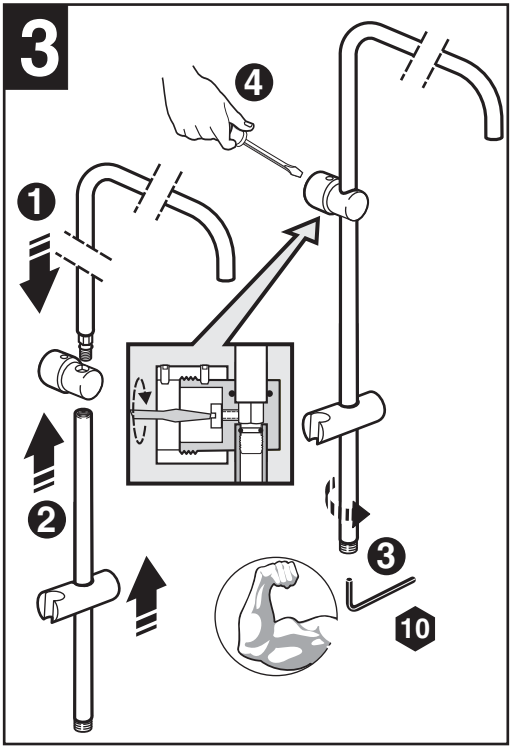

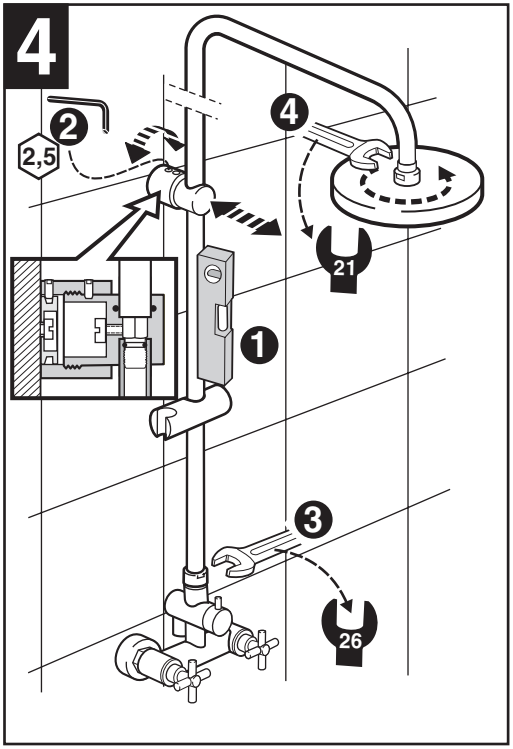

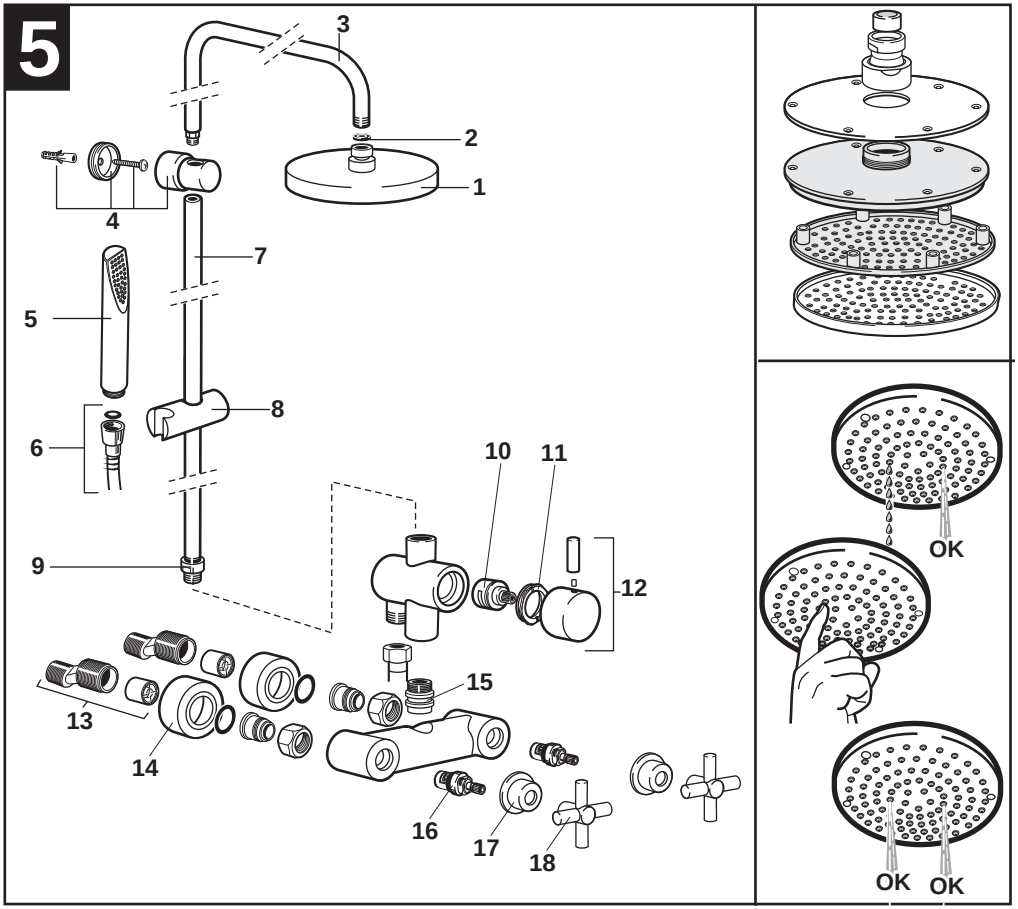
5
1
2
3
4
5
6
7
8
9
10
11
12
13
14
15
16
17
18
OK
OK
OK

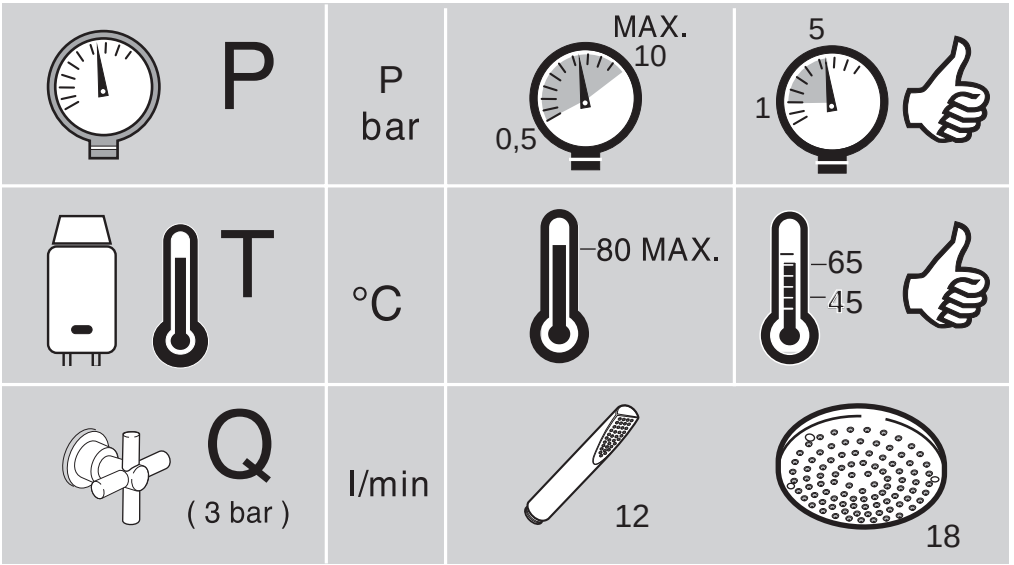
P
P
bar
MAX.
10
0,5
5
1
T
°C
80 MAX.
65
45
Q
(3 bar)
l/min
12
18

1 - 5B9850C00	6 - 525761100	11 - 504630803	15 - 505520503
2 - 543355207	7 - 504251000	12 - 504521600	16 - 505123403
3 - 504250700	8 - 505716400	13 - 505520400	17 - 502781200
4 - 505718700	9 - 505717600	14 - 505003400	18 - 504521700
5 - 5B9047C00	10 - 505123407		

Roca Sanitario, S.A.

Avda. Diagonal, 513
08029 Barcelona SPAIN
Teléfono 93 366 1200
Fax 93 419 4501
www.roca.es

5-430854a